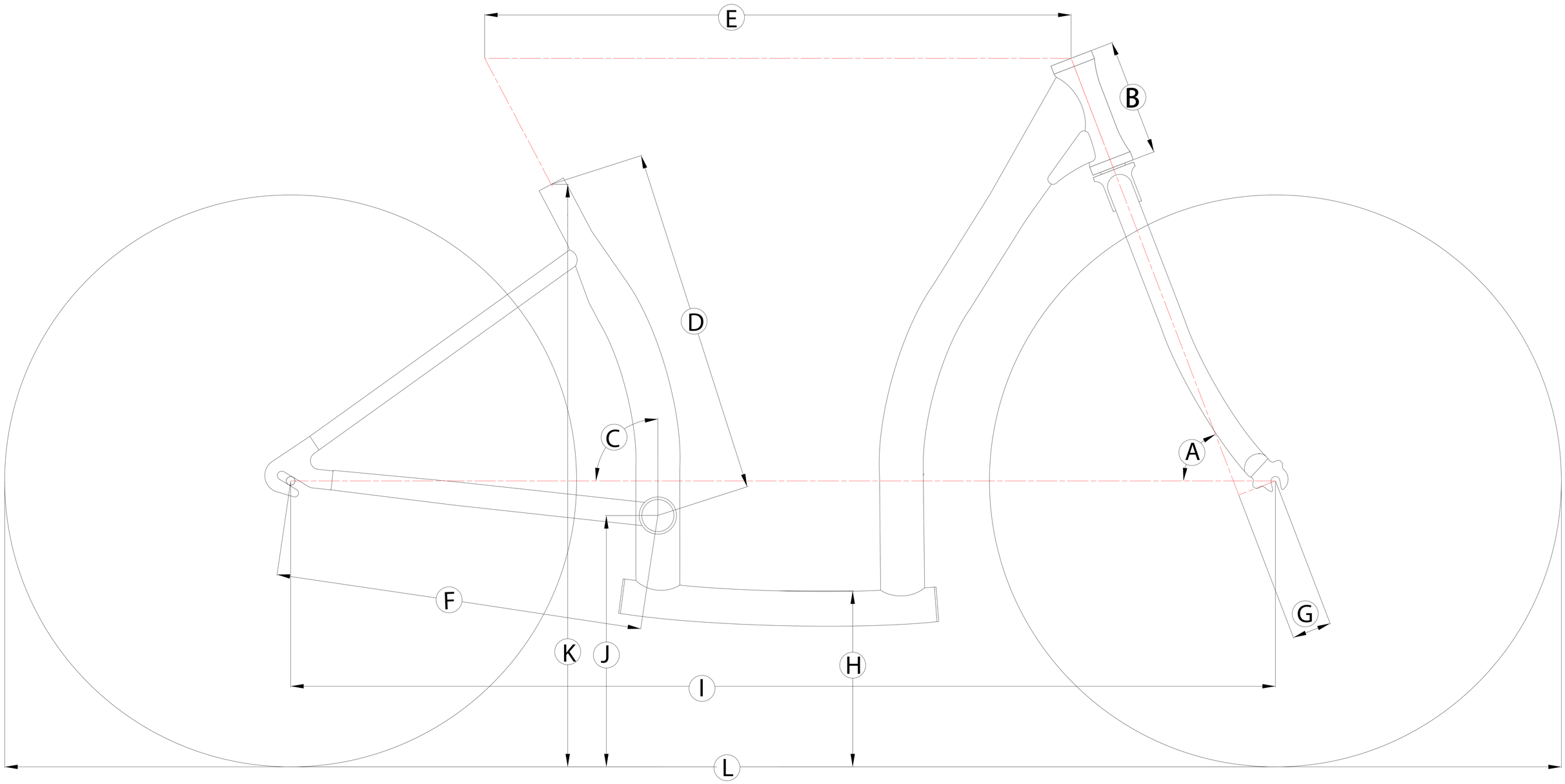

	Frame Size	16 inch		
		cm	in.	mm
A	Head Tube Angle	69 Deg.	69 Deg.	69 Deg.
B	Head Tube	13.5	5.3	135
C	Seat Tube Angle	62 Deg.	62 Deg.	62 Deg.
D	Seat Tube	40.1	15.8	401
E	Top Tube (Effective)	59.9	23.6	599
F	Chain Stay	43	16.9	169
G	Fork Offset	4.5	1.8	45
H	Standover	20.3	8	203
I	Wheelbase	114	44.9	1140
J	BB	29	11.4	290
K	Seat Tube to Ground	67.2	26.5	672
L	Overall length	179.7	70.7	1797