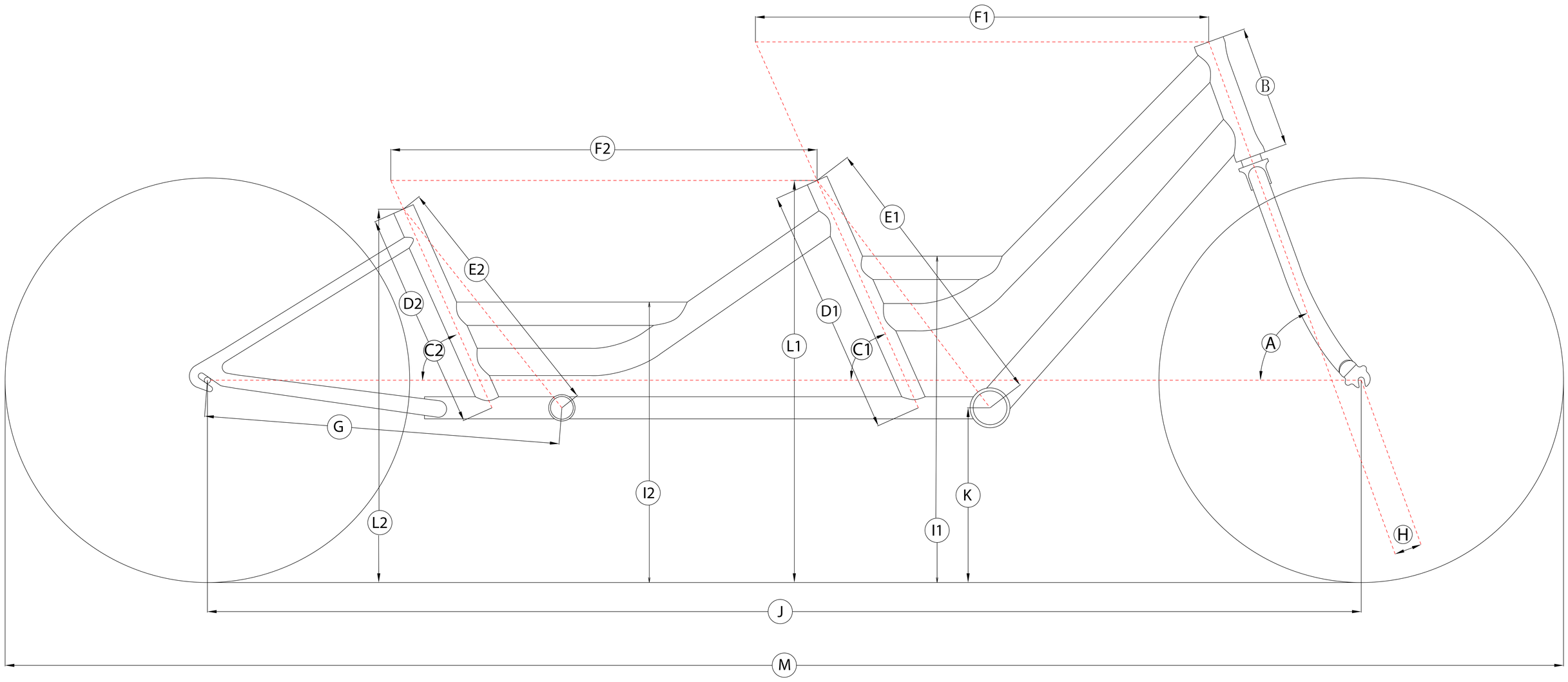

Frame Size		16/14 inch		
		cm	in.	mm
A	Head Tube Angle	70 Deg.	70 Deg.	70 Deg.
B	Head Tube	20	7.9	200
C1	Seat Tube Angle	66 Deg.	66 Deg.	66 Deg.
C2	Seat Tube Angle	66 Deg.	66 Deg.	66 Deg.
D1	Seat Tube (Actual)	40.6	16	406
D2	Seat Tube (Actual)	35.5	14	355
E1	Seat Tube (Effective)	46.3	18.2	463
E2	Seat Tube (Effective)	41.4	16.3	414
F1	Top Tube (Effective)	74	29.1	740
F2	Top Tube (Effective)	70	27.4	696
G	Chain Stay	58	22.8	580
H	Fork Offset	4.5	1.8	45
I1	Standover	53.9	21.2	539
I2	Standover	46.4	18.3	464
J	Wheelbase	188.3	74.1	1883
K	BB to Ground	29.1	11.5	291
L1	Seat Tube to Ground	66.4	26.1	664
L2	Seat Tube to Ground	61.7	24.3	617
M	Overall length	255.7	100.7	2557