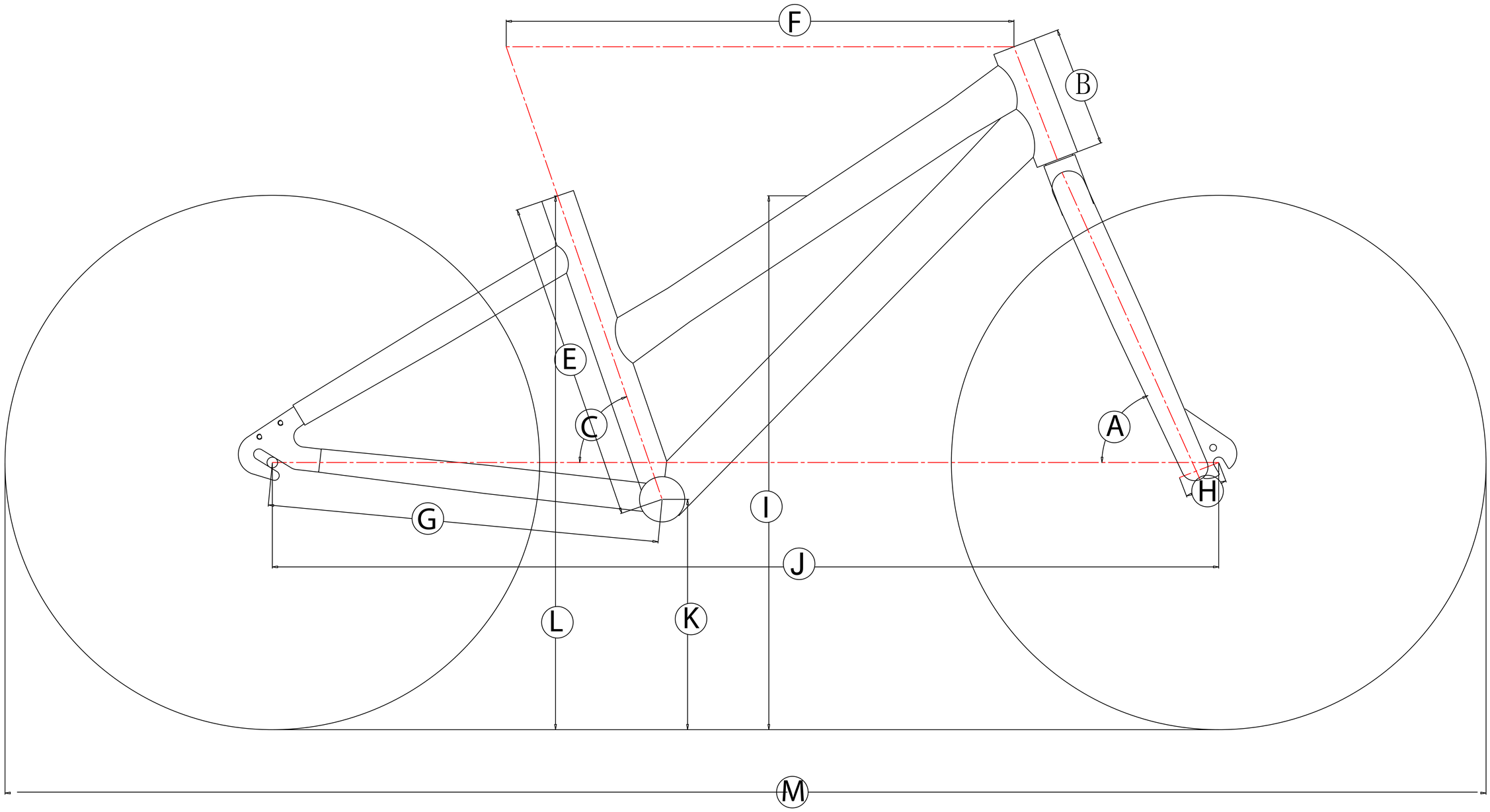

Frame Size		12 inch		
		cm	in.	mm
A	Head Tube Angle	69 Deg.	69 Deg.	69 Deg.
B	Head Tube	11.5	4.5	115
C	Seat Tube Angle	71 Deg.	71 Deg.	71Deg.
D	Seat Tube	30.5	12	305
F	Top Tube (Effective)	48.2	18.9	482
G	Chain Stay	37.2	14.6	372
H	Fork Offset	4	1.6	40
I	Standover	50.7	20	507
J	Wheelbase	89.9	35.3	899
K	BB	21.9	8.6	219
L	Seat Tube to Ground	50.7	20	507
M	Overall length	140.7	55.3	1407